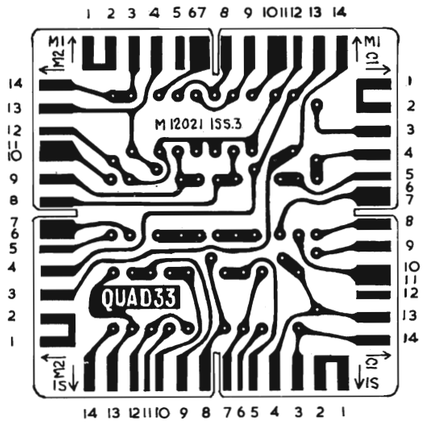

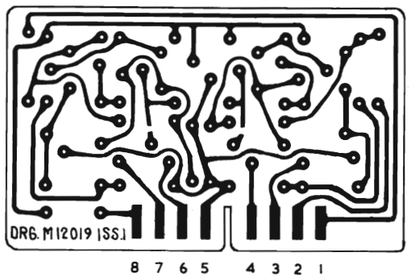

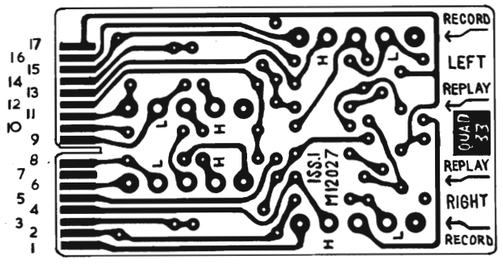

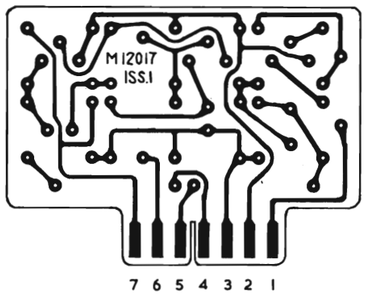

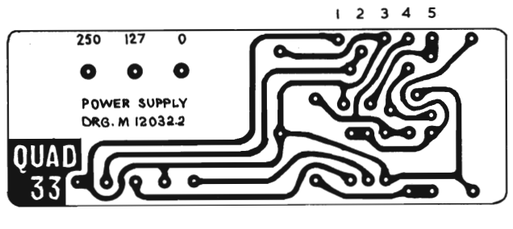

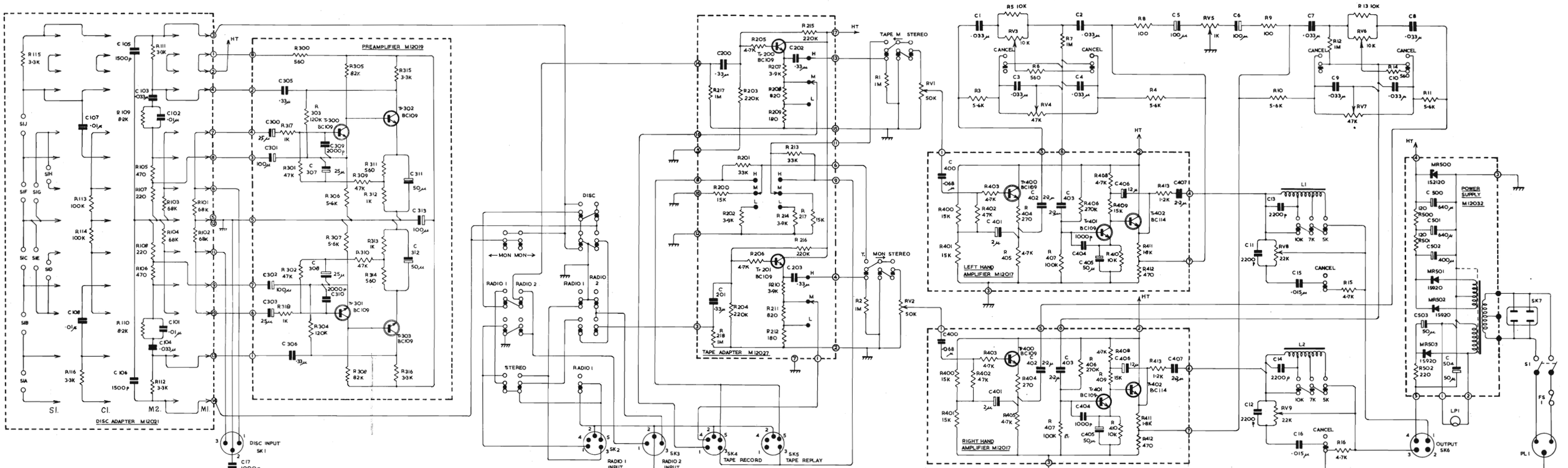

The Acoustical Mfg. Co. Ltd. Huntingdon England. Circuit Diagram. QUAD 33. Drg M 12065. ISS.2.