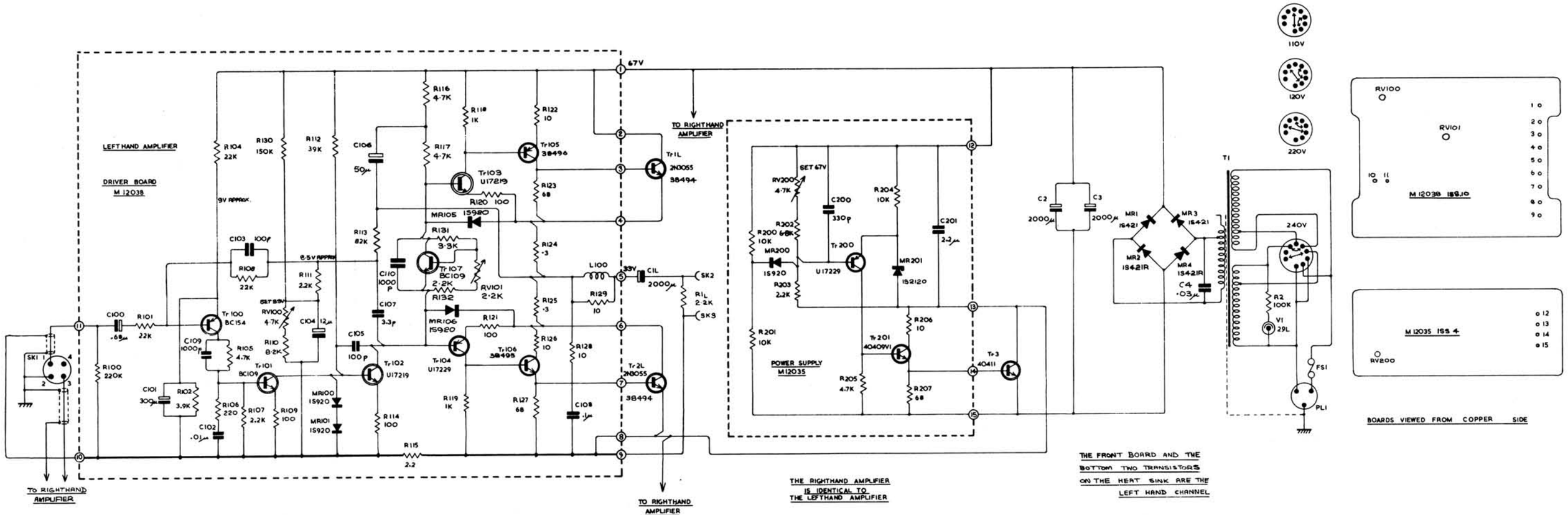

QUAD 303 CIRCUIT DIAGRAM (ABOVE SERIAL No. 11500) DRG. No. M 12160 ISS. 1.