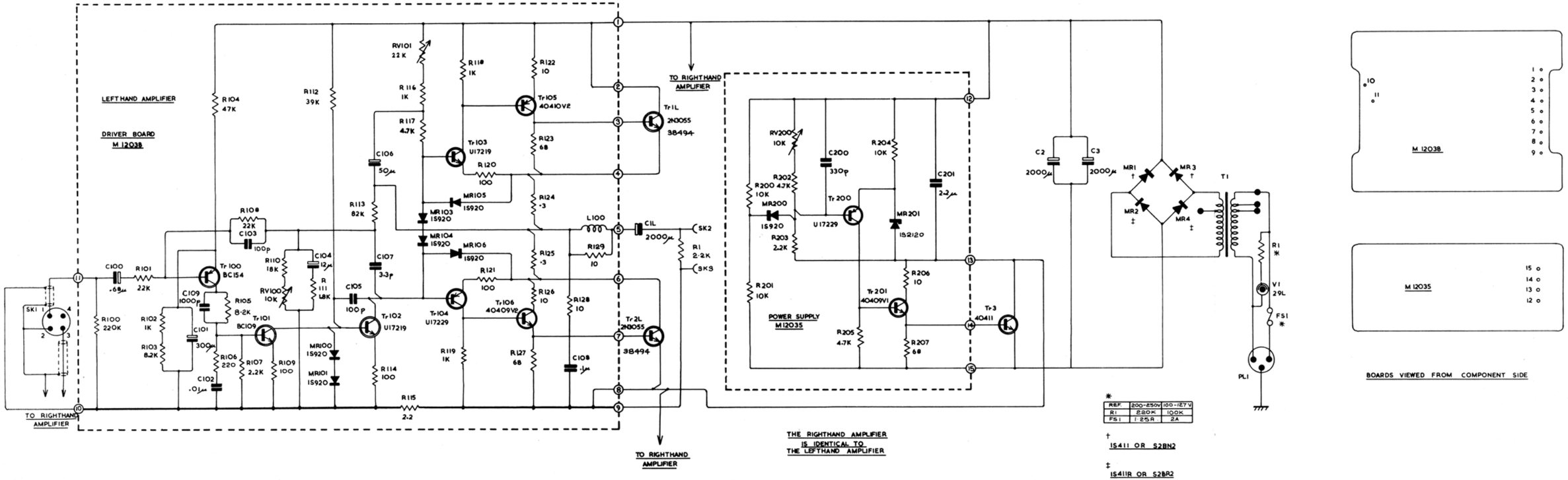

REF.	200-250V	100-127V
R1	220K	100K
FS1	1·25A	2A

† 1S411 OR S2BN2

‡ 1S411R OR S2BR2

The Acoustical Mfg. Co. Ltd. Huntingdon England. QUAD 303 Circuit Diagram. Drg. No. M 12056 Iss 3